Rush Crane S047	**RCS (Fassi F165AZ) Q-3**
	in. Wheelbase
, United States	**Quote 3,**
Phone: (210) 901-7204	**Phone:**
Fax:	**Fax:**
Email:	**Contact Email:**
	Prepared for: Default Contact

Horizontal Dimensions

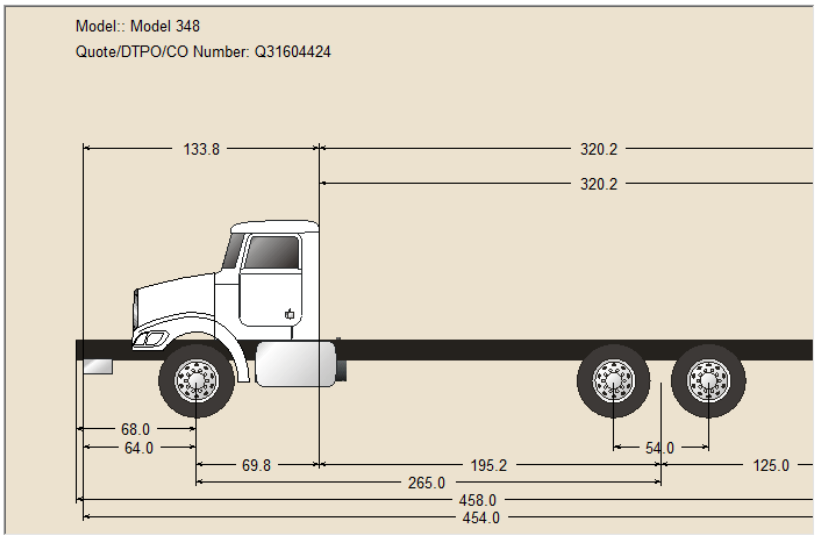

Unpublished options may require review/approval.
Dimensional and performance data for unpublished options may vary from that displayed in PROSPECTOR.

Printed:	1/6/2017 4:19:39 PM	***Complete***	Model Number:	Model 348
Effective Date:	Jan 1, 2017		Quote/DTPO/CO:	Q31604424
Prepared by:	Administrator		Version Number:	34.01

Rush Crane S047	**RCS (Fassi F165AZ) Q-3**
	in. Wheelbase
, United States	**Quote 3,**
Phone: (210) 901-7204	**Phone:**
Fax:	**Fax:**
Email:	**Contact Email:**
	Prepared for: Default Contact

Fuel Tanks

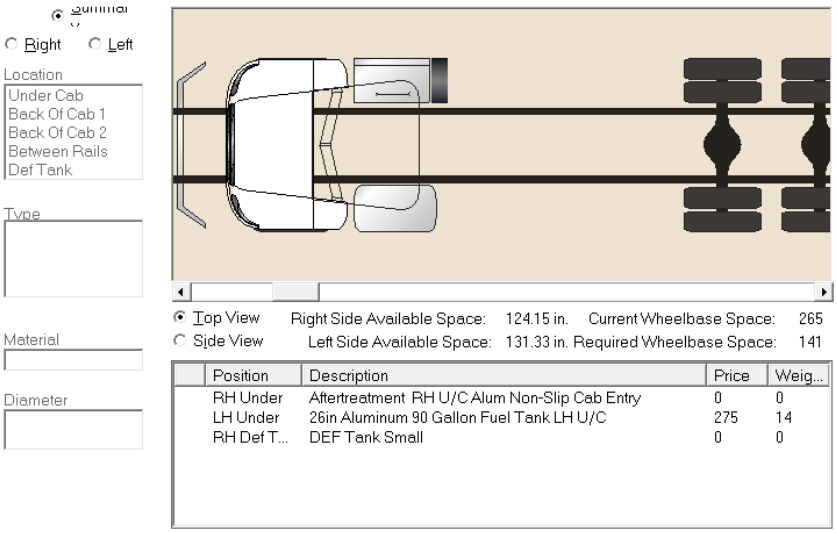

Unpublished options may require review/approval.
Dimensional and performance data for unpublished options may vary from that displayed in PROSPECTOR.

Printed:	1/6/2017 4:20:29 PM	***Complete***	Model Number:	Model 348
Effective Date:	Jan 1, 2017		Quote/DTPO/CO:	Q31604424
Prepared by:	Administrator		Version Number:	34.01

Rush Crane S047

, United States
Phone: (210) 901-7204
Fax:
Email:

RCS (Fassi F165AZ) Q-3

in. Wheelbase
Quote 3,
Phone:
Fax:
Contact Email:
Prepared for: Default Contact

Weight Distribution

Weight Distribution

Actual performance of a specific unit can be affected by your operating conditions. The performance calculations should only be used as a guideline.

Truck Spec | Auxiliary Payload

del: Model 348
ote/DTPO/CO Number: Q72004546

Recommended Payload Center of Gravity to achieve specified ground loads; measured from centerline of drive axles: 60 in. from the centerline of the drive axle(s)

Weight (lbs)	Front	Rear	Total
Chassis	8138	6392	14530
Tools/Driver	311	64	375
Fuel & DEF	581	169	750
Max Payload	9710	33375	43085
Auxiliary Payload	0	0	0
Total	18740	40000	58740
pecify Ground Load	18740	40000	

Unpublished options may require review/approval.
Dimensional and performance data for unpublished options may vary from that displayed in PROSPECTOR.

Printed:	1/6/2017 4:21:03 PM	***Complete***	Model Number:	Model 348
Effective Date:	Jan 1, 2017		Quote/DTPO/CO:	Q72004546
Prepared by:	Administrator		Version Number:	34.01

Rush Crane S047	**RCS (Fassi F165AZ) Q-3**
	in. Wheelbase
, United States	**Quote 3,**
Phone: (210) 901-7204	**Phone:**
Fax:	**Fax:**
Email:	**Contact Email:**
	Prepared for: Default Contact

Gear Split

GEAR SPLIT CHART

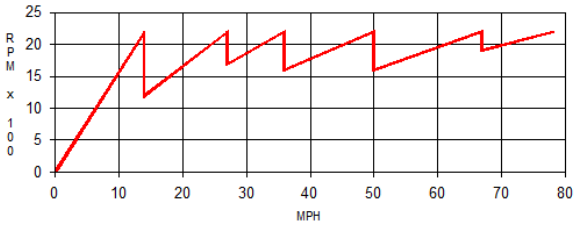


```
Configuration:      Model 348 / Full Truck   GCW: 58500
Quote/DTPO/CO Number:   Q22104255
Rear Axle:           1526150  Meritor MT40-14X 40,000 lb   5.29 Ratio(s)
Rear Tire:           5169310  RR: BR 16ply 11R22.5 M799
Engine:              2074406  PACCAR PX-9 350@2000 GOV@2200 1150@1400
Transmission:        4052110  Allison 3000 RDS-P Transmission, Gen 5
```

Unpublished options may require review/approval.
Dimensional and performance data for unpublished options may vary from that displayed in PROSPECTOR.

Printed:	1/6/2017 4:21:37 PM	***Complete***	Model Number:	Model 348
Effective Date:	Jan 1, 2017		Quote/DTPO/CO:	Q22104255
Prepared by:	Administrator		Version Number:	34.01